# User Manual

Code: DS-1663ZJ

CAMERA CEILING BRACKET **DS-1663ZJ** Hikvision

## Warning!

Please read the user manual included in this work as it contains important information related with safety of installation and use of the device.
Only persons who read the user manual may use the device.
The user manual must be kept because it may be required in the future. The device is to be used exclusively for purposes specified in this user manual.
The device must be unpacked prior to starting-up. After removing the packaging make sure the device is in working order.
If the product has defects, it should not be used until it is repaired.
The product is intended for use at home and commercial use and may not be used for other than intended use.
The manufacturer is not liable for damages resulting from not adhering to the rules contained in the user manual, therefore, we recommend to follow the aforementioned safety rules for operation and maintenance of the device. In this way you will ensure yourself safety and avoid causing damage to the device.
The manufacturer and the supplier are not liable for losses or damages arising out of the product, including financial or intangible losses, loss of profits, income, data, pleasure from use of the product or other products related with it - indirect, incidental or consequential loss or damage. The above provisions apply whether the loss or damage concerns:
1. Deterioration of quality or the lack of operation of the products or products related with it due to damage as well as the lack of access to the product when it is undergoing repair, which results in stoppage the loss of user's time or a break in business activity;
2. Improper results of operation of the product or products related with it;
3. It applies to losses and damages according to any legal category, including negligence and other losses, termination of a contract, expressed or implied guarantee and strict liability (even if the manufacturer or the supplier was notified about the possibility of occurrence of such damages).

**Safety measures:**
Particular attention at designing was directed to quality standards of the device where ensuring safety of operation is the most important factor.
The device must be secured against contact with caustic, staining and viscous fluids.

Ceiling bracket for cameras. Bracket has cable entry.

| | |
|---|---|
| Neck diameter: | Ø 47 mm |
| Suitable for cameras: | Hikvision - Speed Dome |
| Material: | Aluminum |

DELTA-OPTI Monika Matysiak; https://www.delta.poznan.pl
POL; 60-713 Poznań; Graniczna 10
e-mail: delta-opti@delta.poznan.pl; tel: +(48) 61 864 69 60

# User Manual

Code: DS-1663ZJ

CAMERA CEILING BRACKET **DS-1663ZJ** Hikvision

| | |
|---|---|
| Color: | White |
| Distance from mounting surface: | 57 mm |
| Weight: | 0.38 kg |
| Dimensions: | Ø 116.5 x 57 mm |
| Manufacturer / Brand: | Hikvision |
| SAP Code: | 302700215 |
| Guarantee: | **3 years** |

View of the ceiling mounting side:

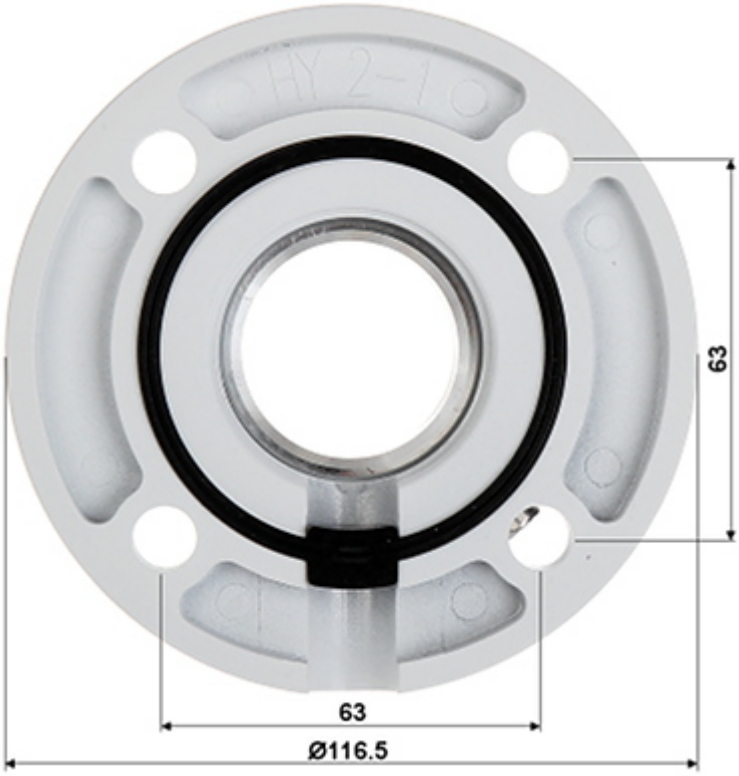


Camera mounting side view:

DELTA-OPTI Monika Matysiak; https://www.delta.poznan.pl
POL; 60-713 Poznań; Graniczna 10
e-mail: delta-opti@delta.poznan.pl; tel: +(48) 61 864 69 60

# User Manual

Code: DS-1663ZJ

CAMERA CEILING BRACKET **DS-1663ZJ** Hikvision

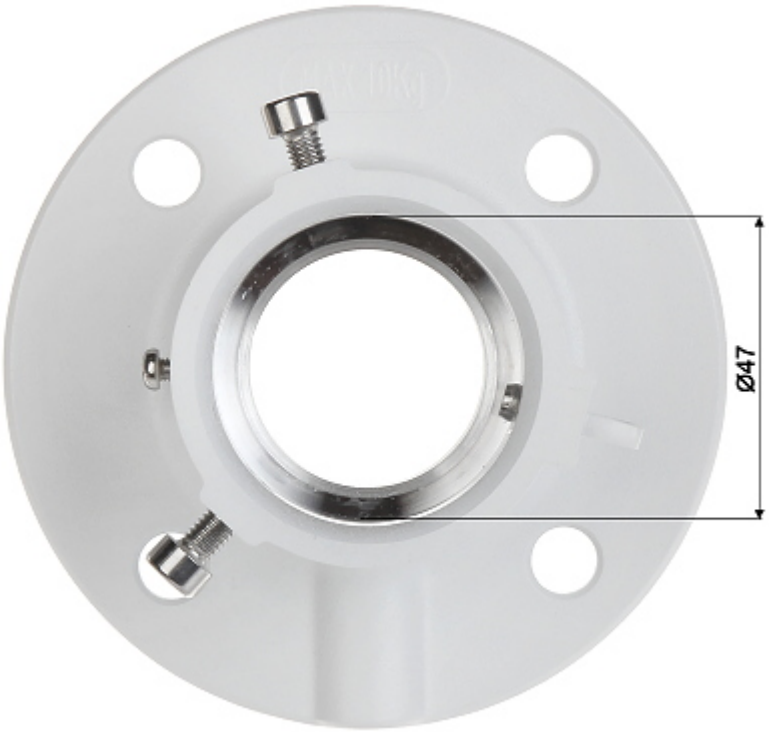


Dimensions:

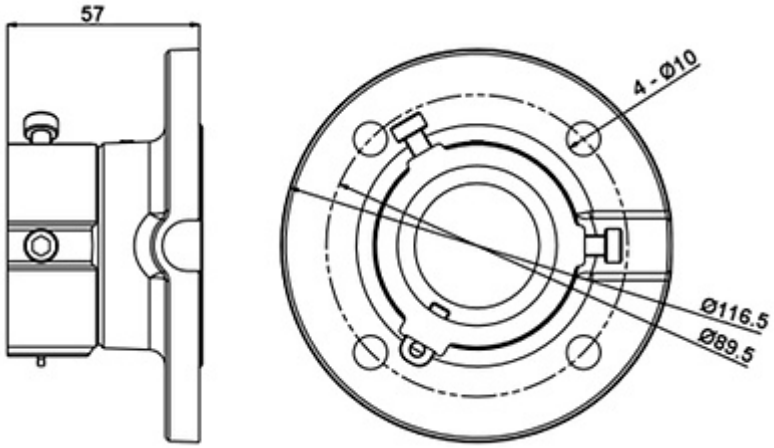


In the kit:

DELTA-OPTI Monika Matysiak; https://www.delta.poznan.pl
POL; 60-713 Poznań; Graniczna 10
e-mail: delta-opti@delta.poznan.pl; tel: +(48) 61 864 69 60

PACKAGE

| | |
|---|---|
| Dimensions (L x W x H): 0x0x0 mm | Gross Weight: 0 kg |

DELTA-OPTI Monika Matysiak; https://www.delta.poznan.pl
POL; 60-713 Poznań; Graniczna 10
e-mail: delta-opti@delta.poznan.pl; tel: +(48) 61 864 69 60