Code: HAC-HFW1509T-A-LED-0360B

AHD, HD-CVI, HD-TVI, PAL CAMERA **HAC-HFW1509T-A-LED-0360B** Full-Color - 5 Mpx 3.6 mm DAHUA

Net: 79.41 EUR Gross: 79.41 EUR

Megapixel camera with 1/2.8" CMOS sensor and AHD / HD-CVI / HD-TVI / PAL.

The AHD / HD-CVI / HD-TVI interface allows to transmission of analog video signal via coaxial cable in max. 8 Mpx (4K UHD) resolution. During transmission there are no delays and is maintained the original, high quality image.

In the case of video transmission using a twisted pair cable and matching transformers (balun), be aware of the possibility of signal reflections and interfering signals.

Camera is according to IP67 Index of Protection norm. The 3-Axis integrated camera bracket has a regulation in all three planes, which allows to turn the camera to any direction.

Attention! The camera of the Full-color series does not have a black and white mode. Thanks to fit the camera in a very sensitive sensor and the LED illuminator emitting visible light in white, the device allows to obtain a clear, colorful image in all lighting conditions. Thanks to the "Starlight" technology used, the camera only needs very low lighting to obtain a clear color image.

SPECIFICATION

Standard:	AHD, HD-CVI, HD-TVI, CVBS
Sensor:	Progressive Scan CMOS
Matrix size:	5 Mpx
Resolution:	• 2592 x 1944 - 5 Mpx @ AHD / HD-CVI / HD-TVI @ 25 fps, • 2560 x 1440 - 4 Mpx @ AHD / HD-CVI / HD-TVI @ 25 fps, • 1920 x 1080 - 1080p @ HD-CVI @ 25 fps, • 960 x 576 - 960H @ PAL
Lens:	3.6 mm
View angle:	• 88 ° (manufacturer data) • 80 ° (our tests result)
White light LED illuminator range:	20 m
Video output:	AHD / HD-CVI / HD-TVI / CVBS, 1 Vpp / 75 Ω
Audio:	• Microphone built-in • Audio support via coaxial cable - HD-CVI only
OSD menu:	✔
Main features:	• Possibility to turn off the LED illuminator • WDR - 120 dB - Wide Dynamic Range • 3D-DNR - Digital Noise Reduction • BLC/HLC - Back Light / High Light Compensation • AGC - Automatic Gain Control • Privacy zones • D-ZOOM - Digital Zoom : x16 • Mirror - Mirror image • Auto White Balance

DELTA-OPTI Monika Matysiak; https://www.delta.poznan.pl
POL; 60-713 Poznań; Graniczna 10
e-mail: delta-opti@delta.poznan.pl; tel: +(48) 61 864 69 60

Power supply:	12 V DC / 370 mA
Power consumption:	≤ 4.4 W
Housing:	Compact, Metal
Color:	White
"Index of Protection":	IP67
Operation temp:	-40 °C ... 60 °C
Weight:	0.34 kg
Dimensions:	175 x 71 x 72 mm
Manufacturer / Brand:	DAHUA
Guarantee:	**3 years**

PRESENTATION

Front view:

Side view:

Camera mounting side view:

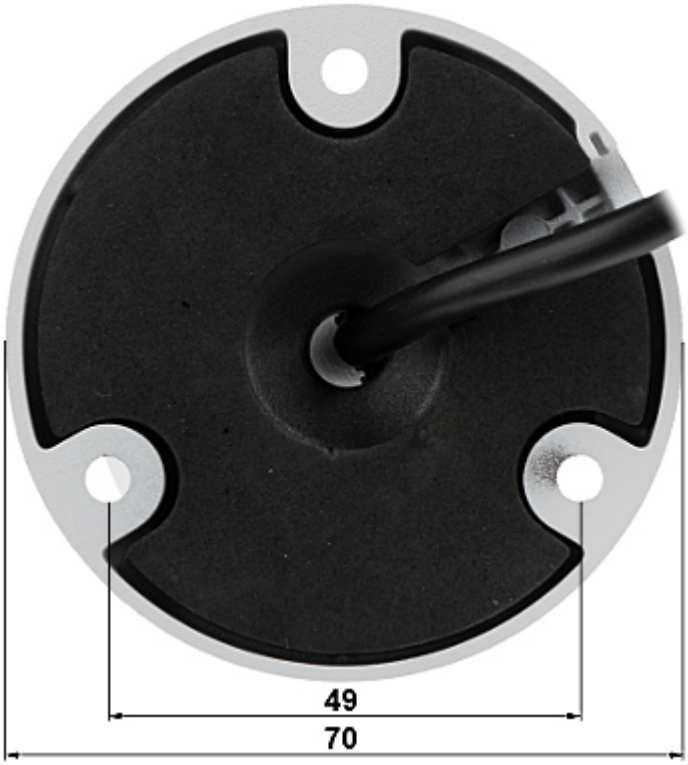

Dimensions:

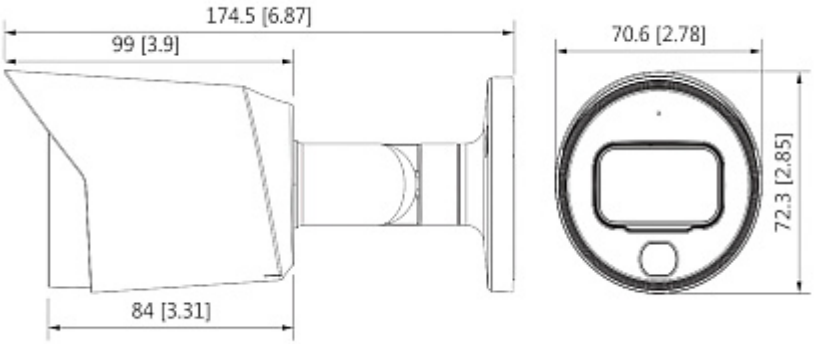

In the kit:

OUR TESTS

AHD:

Camera image at artificial illumination (about 30Lux):

Camera image at night conditions with internal built-in LED illuminator on:

Camera image at direct strong light opposite to camera:

HD-CVI:

Camera image at artificial illumination (about 30Lux):

DELTA-OPTI Monika Matysiak; https://www.delta.poznan.pl
POL; 60-713 Poznań; Graniczna 10
e-mail: delta-opti@delta.poznan.pl; tel: +(48) 61 864 69 60

Camera image at night conditions with internal built-in LED illuminator on:

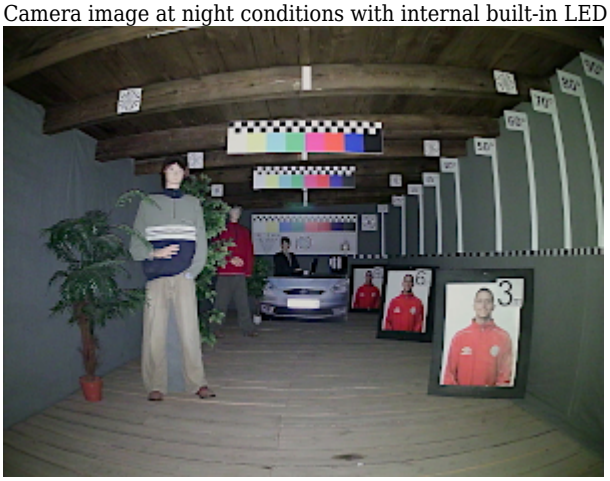

Camera image at direct strong light opposite to camera:

HD-TVI:

Camera image at artificial illumination (about 30Lux):

Camera image at night conditions with internal built-in LED illuminator on:

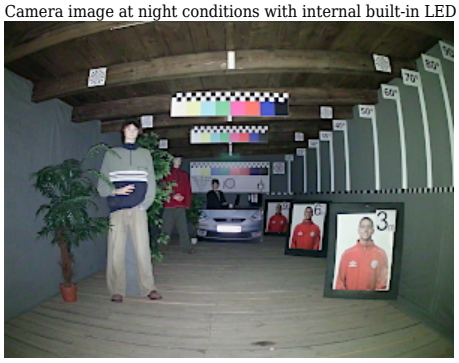

DELTA-OPTI Monika Matysiak; https://www.delta.poznan.pl
POL; 60-713 Poznań; Graniczna 10
e-mail: delta-opti@delta.poznan.pl; tel: +(48) 61 864 69 60

Camera image at direct strong light opposite to camera:

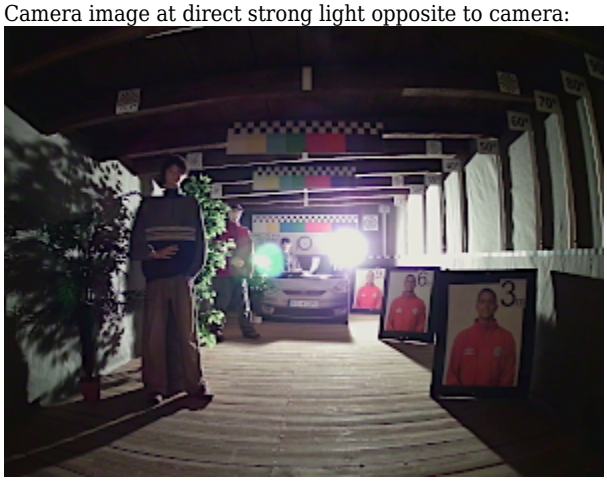

PACKAGE

Dimensions (L x W x H): 0x0x0 mm	Gross Weight: 0 kg