Code: BRU-2

POLE MOUNT **BRU-2**

Net: 3.37 EUR Gross: 3.37 EUR

Steel, galvanized mount intended for mounting camera housing bracket on a pole.

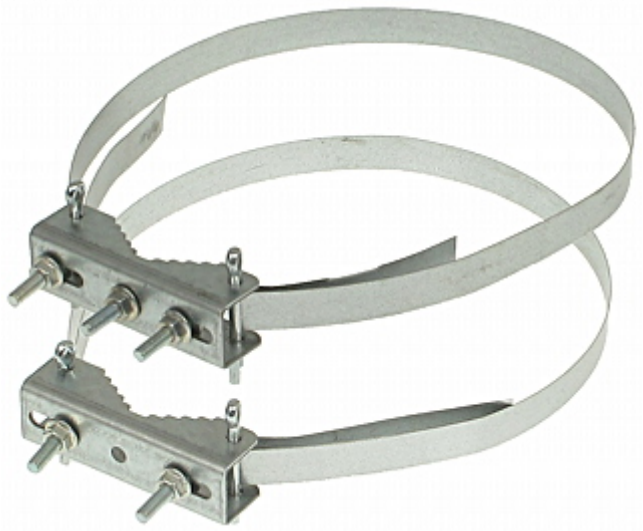

SPECIFICATION

Material:	Steel galvanized
Pole diameters range:	Ø 90 ... Ø 150 mm
Strip length:	2 m (total)
Strip width:	16 mm
Strip thickness:	0.4 mm
Support:	TP-207, BR-260H, BR300TP
Main features:	• The mounting with the steel strips • In the kit - Screws Ø 5 mm, Thread length : 10 mm
Weight:	0.34 kg
Manufacturer / Brand:	DELTA
Guarantee:	**3 years**

PRESENTATION

The correct mounting of the strip:

DELTA-OPTI Monika Matysiak; https://www.delta.poznan.pl
POL; 60-713 Poznań; Graniczna 10
e-mail: delta-opti@delta.poznan.pl; tel: +(48) 61 864 69 60

The single clamp holes distance:

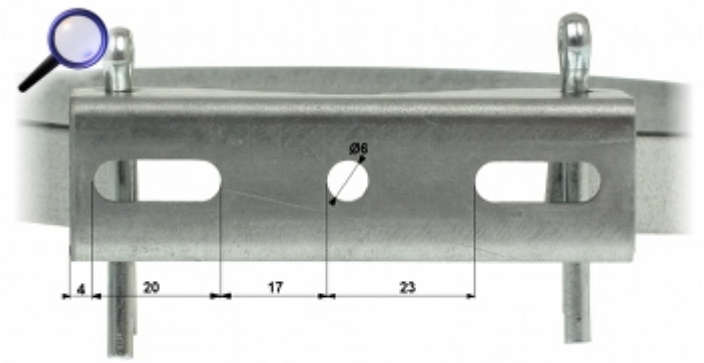

In the kit:

Package:

DELTA-OPTI Monika Matysiak; https://www.delta.poznan.pl
POL; 60-713 Poznań; Graniczna 10
e-mail: delta-opti@delta.poznan.pl; tel: +(48) 61 864 69 60

PACKAGE

Dimensions (L x W x H): 0x0x0 mm	Gross Weight: 0 kg